5 REFRIGERANT SYSTEM DIAGRAM
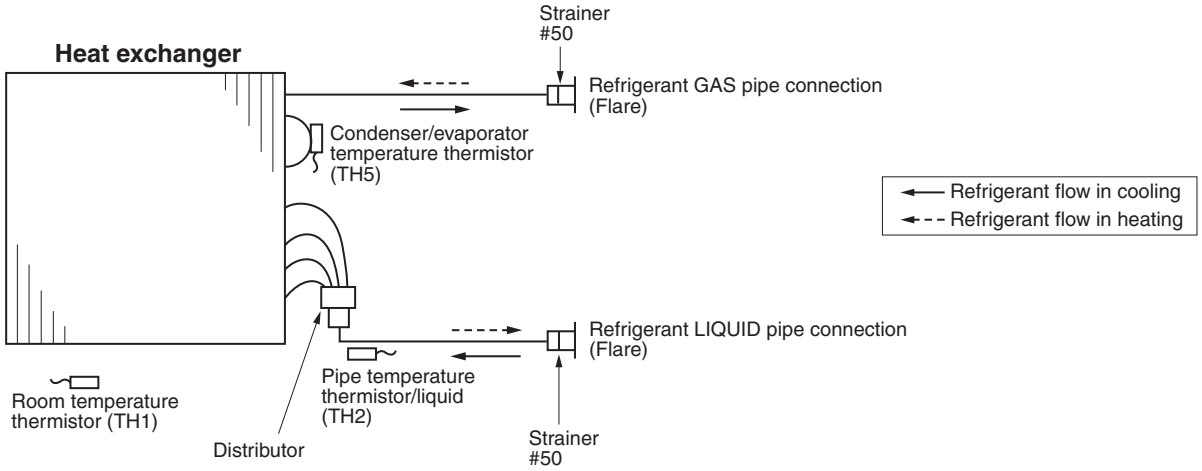
SEZ-KD09NA4.TH
SEZ-KD12NA4.TH
SEZ-KD15NA4.TH
SEZ-KD18NA4.TH